Light is OSRAM

OSRAM
Opto Semiconductors

OSLON SSL®
White (CCT 2500 K – 6500 K)

IES LM-80-08 Test Report

Test Documentation No.: 150439W1 (OSRM007-01-121) – 11th November 2015

NVLAP LAB CODE 500055-0

LM80 7000 Hour Interval Test Report

IES LM-80-08 Approved Method for Measuring Lumen Maintenance of LED Light Sources

CSA Group Report: OSRM007-01-121

November 2, 2015

Manufacturer:	**OSRAM**
Models tested:	**GW CSHPM1.EM**
Test conditions:	24 devices @ 55.0 C, 0.500 A 24 devices @ 85.0 C, 0.500 A 24 devices @ 105.0 C, 0.500 A

Prepared for:
OSRAM Opto Semiconductors (Malaysia) Sdn. Bhd.
Bayan Lepas Free Industrial Zone Phase 1,
11900 Bayan Lepas, Penang, Malaysia

Attn:

Testing performed by:
CSA Group, Orb Optronix
14833 NE 87th St
Redmond, WA 98052
425-605-8500
www.OrbOptronix.com
www.csagroup.org

Test report prepared by:

Gabriel Trippel

Project Engineer,
Test and Measurement Services

Test report approved by:

Aaron Miller

Laboratory Manager,
Test and Measurement Services

This report may not be reproduced except in full without permission of CSA Group.

1.0 Statement of test conditons, summary of results, and reporting requirements:

Part number: GW CSHPM1.EM					
Life test conditions				Summary of results	
Test condition	Drive current (A)	Case temperature (°C)	Elapsed life test time (hrs)	Average lumen maintenance (%)	Maximum chromaticity shift (Δu'v')
TC1	0.500	55	7000	96.9	0.0027
TC2	0.500	85	7000	92.8	0.0047
TC3	0.500	105	7000	91.6	0.0044

LM80-08 Reporting requirements	
1. Number of samples tested:	24 per test condition
2. Description of LED light sources	LED Package[1]
3. Description of auxiliary equipment	see section 6.1 below
4. Operating cycle	LED packages are driven at constant current for life test and are pulsed for photometric test.
5. Ambient conditions, airflow, relative humidity	LED's are operated on controlled thermal plates in an environment that complies with the requirements given in Section 4.4 of LM80-08. Case temperature (Ts): controlled to within -2°C, Surrounding air temp: controlled to within -5°C of Ts, Humidity: < 65 RH, No forced air flow
6. Case temperature (test point temperature)	See summary table above for test conditions. The temperature measurment point is shown in Sec. 6.3.
7. Drive current during life test	see summary table above
8. Initial luminous flux and forward voltage	see data tables for individual test conditions
9. Lumen maintenance data for each individual LED light source	see data tables for individual test conditions
10. Observation of LED light source failures	see data tables for individual test conditions
11. LED light source monitoring intervals	see data tables for individual test conditions
12. Photometric measurement uncertainty	k=2 expanded measurement uncertainty for relative luminous flux measurements is ±2.0%
13. Chromaticity shift reported over the measurement time	see data tables for individual test conditons
14. Test start date	14 November 2014
15. ANSI target and calculated CCT values	see data tables

Notes:
1. per ANSI/IESNA RP-16-05 Addendum b, *Nomenclature and Definitions for Illuminating Engineering*

This report may not be reproduced except
in full without permission of CSA Group.

CSA Group
14833 NE 87th St Redmond, WA 98052
425-605-8500
www.csagroup.org

Test Condition 1 55 °C 0.500 A

TABLE 2.0 - LUMEN MAINTENANCE RESULTS **GW CSHPM1.EM**

TEST CONDITION 1: 55 °C 0.500 A

Photometric test drive current: 0.500 A
Photometric test ambient temperature: 25 ± 2 °C
Failures observed: none

Load board ID	Device number	Zero hour measurements Flux (lm)	Zero hour measurements Vf (V)	Lumen Maintenance (%) 24	48	168	500	1000	2000	3000	4000	5000	6000	7000
4D00000CC066031C	D1	128.88	3.06	99.3	99.4	99.7	99.4	99.1	98.2	98.5	98.4	97.8	97.8	97.9
	D2	130.40	3.08	99.3	99.4	99.6	99.5	99.3	98.5	98.9	98.8	98.1	98.0	98.2
	D3	129.15	3.12	98.8	98.7	98.7	98.3	98.0	96.9	97.1	96.6	96.0	95.9	96.0
	D4	130.17	3.08	99.1	99.2	99.3	99.1	99.0	98.2	98.5	98.3	97.7	97.6	97.8
	D5	129.04	3.11	99.1	99.0	99.2	99.0	98.6	97.8	98.0	97.9	97.1	97.1	97.1
	D6	127.98	3.05	99.4	99.0	99.2	98.9	98.7	97.8	98.1	96.6	96.2	96.1	96.3
	D7	128.45	3.14	98.2	98.1	98.2	97.9	97.7	96.9	96.5	96.1	95.4	95.1	94.9
	D8	130.56	3.09	99.3	99.3	99.5	99.3	99.2	98.4	98.7	98.5	97.9	97.8	97.9
	D9	128.70	3.11	99.1	99.3	99.4	99.1	98.9	98.0	98.3	98.1	97.4	97.3	97.3
	D10	128.26	3.12	98.9	98.9	99.1	98.8	98.5	97.6	97.9	97.7	96.9	96.8	96.9
	D11	129.85	3.02	99.4	99.5	99.8	99.6	99.2	98.4	98.7	98.4	97.7	97.6	97.8
	D12	130.77	3.08	99.4	99.5	99.6	99.4	99.2	98.5	98.8	98.4	97.6	97.5	97.5
C300000CBDED031C	D1	127.74	3.13	99.3	99.4	99.0	98.7	98.6	98.1	97.2	97.2	96.5	96.3	95.9
	D2	129.72	3.03	99.7	99.8	99.5	99.3	99.3	99.2	98.5	98.8	97.9	98.1	97.8
	D3	127.57	3.02	99.6	99.7	99.4	99.0	99.2	98.6	98.2	98.3	97.4	97.5	97.2
	D4	130.07	3.12	99.4	99.7	99.3	98.9	98.8	98.3	97.6	97.5	96.5	96.4	95.6
	D5	128.42	3.14	99.3	99.4	99.1	98.6	98.5	97.9	97.0	97.1	96.2	96.2	95.7
	D6	128.53	3.04	99.2	99.3	99.1	98.9	98.9	98.7	98.0	97.0	96.4	96.6	96.4
	D7	127.86	3.05	99.8	99.9	99.6	99.2	99.3	99.0	98.4	98.4	97.6	97.8	97.4
	D8	130.16	3.04	99.9	100.0	99.8	99.5	99.6	99.4	98.7	98.8	98.1	98.2	97.8
	D9	129.31	3.02	99.8	100.0	99.8	99.4	99.5	99.2	98.5	98.3	97.4	97.7	97.2
	D10	128.11	3.10	99.8	99.9	99.6	99.3	99.2	98.9	98.0	98.3	97.4	97.6	97.2
	D11	129.82	3.02	99.8	99.9	99.6	99.3	99.4	99.1	98.3	98.2	97.2	97.5	97.1
	D12	128.60	3.13	99.4	99.4	99.1	98.7	98.6	98.0	97.1	97.2	95.9	96.1	95.6
			n	24	24	24	24	24	24	24	24	24	24	24
			mean	99.3	99.4	99.3	99.0	98.9	98.3	98.1	97.9	97.1	97.1	96.9
			median	99.3	99.4	99.4	99.1	99.0	98.3	98.2	98.2	97.4	97.5	97.2
			std. dev.	0.4	0.4	0.4	0.4	0.5	0.7	0.7	0.8	0.8	0.8	0.9
			min	98.2	98.1	98.2	97.9	97.7	96.9	96.5	96.1	95.4	95.1	94.9
			max	99.9	100.0	99.8	99.6	99.6	99.4	98.9	98.8	98.1	98.2	98.2

This report may not be reproduced except in full without permission of CSA Group.

CSA Group
14833 NE 87th St Redmond, WA 98052
425-605-8500
www.csagroup.org

Test Condition 1 55 °C 0.500 A

TABLE 2.1 - CHROMATICITY SHIFT RESULTS **GW CSHPM1.EM**

TEST CONDITION 1: 55 °C 0.500 A

Photometric test drive current: 0.500 A
Photometric test ambient temperature: 25 ± 2 °C
Failures observed: none

Load board ID	Device number	Zero hour measurements u'	Zero hour measurements v'		Chromaticity shift (Δu'v') 24	48	168	500	1000	2000	3000	4000	5000	6000	7000
4D00000CC066031C	D1	0.2452	0.5211		0.0006	0.0007	0.0009	0.0008	0.0011	0.0010	0.0010	0.0012	0.0016	0.0016	0.0019
	D2	0.2466	0.5223		0.0005	0.0008	0.0008	0.0008	0.0009	0.0008	0.0008	0.0009	0.0011	0.0014	0.0015
	D3	0.2448	0.5206		0.0005	0.0008	0.0008	0.0009	0.0010	0.0010	0.0010	0.0011	0.0016	0.0017	0.0020
	D4	0.2455	0.5219		0.0006	0.0008	0.0009	0.0010	0.0010	0.0009	0.0011	0.0011	0.0017	0.0019	0.0023
	D5	0.2457	0.5196		0.0005	0.0007	0.0009	0.0008	0.0010	0.0009	0.0009	0.0010	0.0014	0.0016	0.0018
	D6	0.2448	0.5209		0.0003	0.0008	0.0009	0.0009	0.0011	0.0010	0.0010	0.0018	0.0023	0.0025	0.0027
	D7	0.2453	0.5203		0.0008	0.0009	0.0009	0.0010	0.0011	0.0010	0.0015	0.0016	0.0021	0.0025	0.0027
	D8	0.2468	0.5230		0.0004	0.0007	0.0008	0.0009	0.0009	0.0008	0.0007	0.0009	0.0012	0.0014	0.0018
	D9	0.2477	0.5227		0.0004	0.0008	0.0008	0.0009	0.0010	0.0009	0.0009	0.0009	0.0013	0.0014	0.0015
	D10	0.2465	0.5208		0.0005	0.0006	0.0008	0.0007	0.0010	0.0008	0.0008	0.0010	0.0015	0.0015	0.0019
	D11	0.2454	0.5206		0.0002	0.0006	0.0006	0.0008	0.0009	0.0008	0.0009	0.0008	0.0012	0.0013	0.0016
	D12	0.2451	0.5231		0.0005	0.0006	0.0009	0.0008	0.0009	0.0007	0.0007	0.0008	0.0011	0.0013	0.0016
C300000CBDED031C	D1	0.2473	0.5228		0.0003	0.0007	0.0010	0.0008	0.0010	0.0008	0.0011	0.0013	0.0016	0.0019	0.0022
	D2	0.2453	0.5215		0.0005	0.0009	0.0010	0.0009	0.0010	0.0008	0.0009	0.0011	0.0014	0.0015	0.0017
	D3	0.2479	0.5218		0.0006	0.0009	0.0011	0.0009	0.0011	0.0010	0.0010	0.0012	0.0014	0.0017	0.0021
	D4	0.2449	0.5230		0.0004	0.0005	0.0008	0.0009	0.0008	0.0009	0.0008	0.0010	0.0015	0.0018	0.0022
	D5	0.2472	0.5229		0.0005	0.0008	0.0008	0.0008	0.0010	0.0009	0.0010	0.0011	0.0015	0.0016	0.0020
	D6	0.2468	0.5215		0.0007	0.0010	0.0012	0.0008	0.0011	0.0009	0.0010	0.0017	0.0018	0.0020	0.0021
	D7	0.2466	0.5219		0.0006	0.0007	0.0010	0.0009	0.0009	0.0008	0.0009	0.0011	0.0014	0.0018	0.0020
	D8	0.2452	0.5214		0.0003	0.0006	0.0008	0.0006	0.0009	0.0007	0.0006	0.0009	0.0010	0.0012	0.0016
	D9	0.2465	0.5228		0.0004	0.0007	0.0009	0.0008	0.0009	0.0007	0.0008	0.0013	0.0014	0.0018	0.0021
	D10	0.2457	0.5199		0.0005	0.0007	0.0009	0.0007	0.0009	0.0007	0.0008	0.0007	0.0010	0.0013	0.0017
	D11	0.2451	0.5218		0.0005	0.0007	0.0009	0.0008	0.0010	0.0008	0.0007	0.0009	0.0012	0.0015	0.0019
	D12	0.2481	0.5208		0.0004	0.0007	0.0009	0.0008	0.0010	0.0008	0.0008	0.0009	0.0012	0.0015	0.0019
				n	24	24	24	24	24	24	24	24	24	24	24
				mean	0.0005	0.0007	0.0009	0.0008	0.0010	0.0008	0.0009	0.0011	0.0014	0.0016	0.0020
				median	0.0005	0.0007	0.0009	0.0008	0.0010	0.0008	0.0009	0.0011	0.0014	0.0016	0.0019
				std. dev.	0.0001	0.0001	0.0001	0.0001	0.0001	0.0001	0.0002	0.0003	0.0003	0.0003	0.0003
				min	0.0002	0.0005	0.0006	0.0006	0.0008	0.0007	0.0006	0.0007	0.0010	0.0012	0.0015
				max	0.0008	0.0010	0.0012	0.0010	0.0011	0.0010	0.0015	0.0018	0.0023	0.0025	0.0027

This report may not be reproduced except
in full without permission of CSA Group.

CSA Group
14833 NE 87th St Redmond, WA 98052
425-605-8500
www.csagroup.org

Test Condition 1 55 °C 0.500 A

TABLE 2.2 - ANSI Target and Calculated CCT Results **GW CSHPM1.EM**

TEST CONDITION 1: 55 °C 0.500 A

Photometric test drive current: 0.500 A
Photometric test ambient temperature: 25 ± 2 °C
Failures observed: none

Load board ID	Device number	Zero hour measurements: ANSI Target* CCT (K)	Zero hour measurements: Calculated CCT (K)	Calculated CCT 24	48	168	500	1000	2000	3000	4000	5000	6000	7000
4D00000CC066031C	D1	3045±175	3139	3123	3121	3116	3120	3111	3111	3111	3109	3101	3107	3105
	D2	3045±175	3094	3085	3077	3078	3077	3077	3077	3074	3071	3069	3065	3068
	D3	3045±175	3153	3139	3132	3133	3131	3128	3126	3126	3124	3116	3120	3114
	D4	3045±175	3124	3110	3105	3103	3104	3101	3101	3096	3098	3088	3089	3089
	D5	3045±175	3137	3123	3120	3116	3119	3118	3114	3113	3109	3104	3105	3101
	D6	3045±175	3149	3143	3127	3125	3126	3121	3123	3123	3106	3096	3097	3098
	D7	3045±175	3142	3121	3117	3117	3116	3114	3113	3103	3101	3094	3094	3093
	D8	3045±175	3082	3073	3069	3066	3064	3066	3064	3064	3060	3057	3056	3055
	D9	3045±175	3062	3051	3044	3043	3041	3040	3039	3039	3038	3034	3033	3034
	D10	3045±175	3108	3095	3093	3089	3092	3085	3088	3086	3083	3077	3080	3080
	D11	3045±175	3137	3131	3121	3121	3119	3118	3116	3113	3115	3108	3110	3110
	D12	3045±175	3127	3115	3113	3107	3108	3108	3111	3109	3106	3102	3103	3102
C300000CBDED031C	D1	3045±175	3073	3064	3056	3049	3052	3050	3051	3046	3041	3038	3039	3037
	D2	3045±175	3134	3121	3110	3109	3109	3109	3112	3109	3106	3100	3104	3102
	D3	3045±175	3064	3049	3041	3037	3040	3037	3037	3038	3037	3032	3033	3029
	D4	3045±175	3133	3121	3121	3112	3111	3114	3111	3113	3108	3100	3099	3098
	D5	3045±175	3074	3060	3054	3055	3053	3050	3052	3049	3047	3039	3043	3040
	D6	3045±175	3094	3077	3069	3063	3073	3068	3070	3069	3052	3050	3050	3054
	D7	3045±175	3096	3081	3077	3070	3073	3073	3075	3072	3068	3064	3063	3060
	D8	3045±175	3136	3128	3120	3118	3121	3116	3118	3121	3114	3112	3114	3112
	D9	3045±175	3092	3082	3073	3070	3070	3070	3073	3072	3062	3061	3060	3057
	D10	3045±175	3135	3123	3117	3113	3115	3115	3118	3113	3116	3111	3109	3106
	D11	3045±175	3136	3124	3118	3113	3114	3112	3116	3117	3113	3107	3108	3107
	D12	3045±175	3064	3056	3047	3042	3045	3042	3043	3045	3042	3034	3035	3032
			n	24	24	24	24	24	24	24	24	24	24	24
			mean	3099.7	3093.5	3090.2	3091.3	3089.3	3090.1	3088.4	3084.4	3079.0	3079.7	3078.4
			median	3112.3	3107.5	3105.2	3105.9	3104.5	3105.9	3099.9	3099.6	3091.0	3091.4	3090.9
			std. dev.	30	30	31	30	30	30	30	30	29	30	30
			min	3049	3041	3037	3040	3037	3037	3038	3037	3032	3033	3029
			max	3143	3132	3133	3131	3128	3126	3126	3124	3116	3120	3114

* target CCT as defined in ANSI C78.377-2008

This report may not be reproduced except in full without permission of CSA Group.

CSA Group
14833 NE 87th St Redmond, WA 98052
425-605-8500
www.csagroup.org

Test Condition 1 55 °C 0.500 A

TABLE 2.3 - FORWARD VOLTAGE MAINTENANCE RESULTS **GW CSHPM1.EM**

TEST CONDITION 1: 55 °C 0.500 A

Photometric test drive current: 0.500 A
Photometric test ambient temperature: 25 ± 2 °C
Failures observed: none

Load board ID	Device number	Zero hour measurements Vf (V)	Forward Voltage Maintainence (%) 24	48	168	500	1000	2000	3000	4000	5000	6000	7000
4D00000CC066031C	D1	3.06	99.61	99.49	99.56	99.51	100.68	100.90	99.23	99.51	99.33	99.43	99.42
	D2	3.08	99.83	99.84	99.75	99.63	106.95	100.86	99.44	99.66	99.49	99.52	99.59
	D3	3.12	99.06	99.03	98.88	98.82	99.21	97.78	99.02	98.90	98.83	98.86	98.84
	D4	3.08	100.04	100.05	99.93	99.87	101.61	101.56	99.96	99.94	99.86	99.86	99.82
	D5	3.11	99.38	99.42	99.31	99.21	99.79	99.77	99.20	99.69	99.17	99.87	99.20
	D6	3.05	99.44	99.51	99.50	99.56	98.93	99.67	99.62	99.99	99.59	100.34	99.56
	D7	3.14	99.05	99.10	99.11	98.93	99.03	99.74	98.82	100.55	99.02	99.26	99.02
	D8	3.09	99.34	99.26	99.33	99.28	98.79	98.49	99.27	99.48	99.37	99.62	99.34
	D9	3.11	99.05	99.03	99.02	98.89	97.96	98.17	98.84	99.09	98.92	99.29	99.02
	D10	3.12	99.48	99.55	99.46	99.47	100.45	100.50	99.11	99.56	99.23	99.81	99.37
	D11	3.02	100.42	100.50	100.40	100.44	101.93	100.49	100.02	101.35	100.08	100.21	100.24
	D12	3.08	99.55	99.61	99.53	99.49	97.62	99.47	99.17	100.19	99.26	99.44	99.36
C300000CBDED031C	D1	3.13	99.28	99.14	99.06	98.86	98.89	99.16	98.78	99.01	98.85	98.82	98.85
	D2	3.03	100.08	100.12	100.07	99.98	102.74	101.91	99.72	99.98	99.88	99.86	99.89
	D3	3.02	100.03	100.06	100.00	99.95	101.46	101.09	99.70	100.00	99.83	100.03	99.90
	D4	3.12	99.87	99.76	99.61	99.50	100.70	100.53	99.20	99.51	99.30	99.57	99.41
	D5	3.14	99.20	99.07	99.02	98.76	98.04	98.77	98.65	98.88	98.74	99.03	98.84
	D6	3.04	99.53	99.38	99.31	99.28	99.53	98.61	99.27	99.70	99.75	99.72	99.44
	D7	3.05	100.06	100.00	100.01	99.90	101.03	99.82	99.76	99.98	100.10	99.98	100.03
	D8	3.04	99.66	99.66	99.67	99.69	98.91	99.59	99.59	99.77	99.90	99.93	99.81
	D9	3.02	99.70	99.56	99.47	99.45	99.74	98.99	99.42	99.60	99.41	99.78	99.55
	D10	3.10	100.10	99.97	99.91	99.86	100.96	100.11	99.64	99.94	99.75	100.17	99.85
	D11	3.02	100.54	100.40	100.41	100.35	102.16	99.54	99.93	100.28	99.99	100.30	100.09
	D12	3.13	99.23	99.23	99.06	98.98	96.80	104.56	98.70	99.18	98.74	98.92	98.85
		n	24	24	24	24	24	24	24	24	24	24	24
		mean	99.6	99.6	99.6	99.5	100.2	100.0	99.3	99.7	99.4	99.7	99.5
		median	99.6	99.6	99.5	99.5	99.8	99.8	99.3	99.7	99.4	99.8	99.4
		std. dev.	0.4	0.4	0.4	0.5	2.1	1.4	0.4	0.6	0.4	0.4	0.4
		min	99.1	99.0	98.9	98.8	96.8	97.8	98.7	98.9	98.7	98.8	98.8
		max	100.5	100.5	100.4	100.4	107.0	104.6	100.0	101.3	100.1	100.3	100.2

This report may not be reproduced except in full without permission of CSA Group.

CSA Group
14833 NE 87th St Redmond, WA 98052
425-605-8500
www.csagroup.org

Test Condition 2 85 °C 0.500 A

TABLE 3.0 - LUMEN MAINTENANCE RESULTS **GW CSHPM1.EM**

TEST CONDITION 1: 85 °C 0.500 A

Photometric test drive current: 0.500 A
Photometric test ambient temperature: 25 ± 2 °C
Failures observed: none

Load board ID	Device number	Zero hour measurements Flux (lm)	Zero hour measurements Vf (V)	Lumen Maintenance (%) 24	48	168	500	1000	2000	3000	4000	5000	6000	7000
4800000CB96E031C	D1	127.90	3.14	98.4	98.0	98.0	97.0	96.7	95.3	94.3	93.4	92.3	91.3	90.6
	D2	127.67	3.12	98.2	97.8	97.8	96.8	96.5	95.2	94.4	93.6	92.6	91.6	90.9
	D3	129.23	3.12	98.3	98.0	98.0	97.0	96.8	95.5	94.6	93.9	93.1	92.3	91.7
	D4	128.65	3.13	98.6	98.1	98.2	97.3	97.1	95.7	94.9	93.6	92.6	91.8	91.1
	D5	128.41	3.09	98.5	98.2	98.4	97.6	97.6	96.5	96.1	95.7	95.2	94.3	93.8
	D6	129.19	3.02	99.1	98.2	98.7	97.9	98.2	97.1	96.9	96.7	96.3	95.7	95.3
	D7	128.94	3.08	98.7	98.3	98.8	98.4	98.4	97.6	97.4	97.1	96.5	95.8	95.3
	D8	128.04	3.13	98.5	98.0	97.6	96.7	96.5	95.2	94.7	94.1	93.3	92.7	92.3
	D9	129.76	3.09	99.0	98.7	99.1	98.3	98.5	97.6	97.2	97.0	96.5	96.0	95.6
	D10	129.06	3.13	98.6	98.3	98.3	97.2	97.0	95.8	95.1	94.4	93.4	92.5	92.0
	D11	129.97	3.05	98.9	98.7	99.1	98.4	98.5	97.8	97.6	97.3	96.8	96.5	96.3
	D12	129.56	3.13	98.3	97.9	98.0	97.1	96.9	95.6	95.0	94.3	93.3	92.5	91.8
8F00000CBBC7031C	D1	127.49	3.14	98.6	98.6	98.4	97.9	97.2	96.4	95.5	95.1	94.6	93.4	93.1
	D2	130.17	3.11	98.9	99.0	98.9	98.5	97.7	97.2	96.5	96.4	95.9	94.6	94.2
	D3	129.93	3.10	98.8	98.7	98.8	98.1	97.5	96.7	96.0	95.6	95.1	94.0	93.3
	D4	128.86	3.09	98.8	99.1	99.1	98.9	98.1	97.4	96.2	95.6	94.8	93.5	92.9
	D5	128.76	3.10	98.4	98.6	98.6	98.2	97.5	97.0	96.0	96.0	95.5	94.3	93.8
	D6	128.51	3.12	98.5	98.4	98.3	97.7	97.0	96.2	95.2	94.9	94.2	92.9	92.0
	D7	129.40	3.13	98.6	98.7	98.6	98.1	97.3	96.5	95.1	94.4	93.6	92.3	91.7
	D8	128.52	3.09	99.3	99.4	99.3	98.8	98.1	97.4	96.6	96.2	95.5	94.4	93.8
	D9	128.69	3.03	99.4	99.4	99.5	99.3	98.8	98.3	97.8	97.3	97.0	95.8	95.2
	D10	128.76	3.14	98.6	98.7	98.4	97.9	97.0	95.9	94.4	93.6	92.7	91.1	90.5
	D11	130.22	3.13	98.3	98.4	98.2	97.5	96.3	95.5	94.2	93.1	92.0	90.5	89.9
	D12	129.61	3.14	98.4	98.5	98.2	97.5	96.6	95.8	94.5	93.8	92.6	91.1	90.4
			n	24	24	24	24	24	24	24	24	24	24	24
			mean	98.7	98.5	98.5	97.8	97.4	96.5	95.7	95.1	94.4	93.4	92.8
			median	98.6	98.5	98.4	97.9	97.2	96.4	95.3	95.0	94.4	93.2	92.6
			std. dev.	0.3	0.4	0.5	0.7	0.7	0.9	1.1	1.4	1.6	1.8	1.9
			min	98.2	97.8	97.6	96.7	96.3	95.2	94.2	93.1	92.0	90.5	89.9
			max	99.4	99.4	99.5	99.3	98.8	98.3	97.8	97.3	97.0	96.5	96.3

This report may not be reproduced except in full without permission of CSA Group.

CSA Group
14833 NE 87th St Redmond, WA 98052
425-605-8500
www.csagroup.org

Test Condition 2 85 °C 0.500 A

TABLE 3.1 - CHROMATICITY SHIFT RESULTS **GW CSHPM1.EM**

TEST CONDITION 1: 85 °C 0.500 A

Photometric test drive current: 0.500 A
Photometric test ambient temperature: 25 ± 2 °C
Failures observed: none

Load board ID	Device number	Zero hour measurements u'	Zero hour measurements v'		Chromaticity shift (Δu'v') 24	48	168	500	1000	2000	3000	4000	5000	6000	7000
4800000CB96E031C	D1	0.2457	0.5199		0.0005	0.0005	0.0008	0.0006	0.0007	0.0008	0.0012	0.0016	0.0021	0.0031	0.0037
	D2	0.2471	0.5213		0.0006	0.0008	0.0008	0.0007	0.0008	0.0008	0.0010	0.0016	0.0020	0.0026	0.0033
	D3	0.2443	0.5221		0.0006	0.0007	0.0008	0.0006	0.0006	0.0008	0.0013	0.0017	0.0023	0.0031	0.0039
	D4	0.2464	0.5200		0.0004	0.0005	0.0008	0.0006	0.0007	0.0008	0.0011	0.0016	0.0022	0.0032	0.0041
	D5	0.2475	0.5217		0.0008	0.0009	0.0011	0.0009	0.0009	0.0009	0.0010	0.0012	0.0017	0.0024	0.0032
	D6	0.2456	0.5220		0.0007	0.0010	0.0010	0.0009	0.0009	0.0009	0.0010	0.0013	0.0016	0.0024	0.0031
	D7	0.2459	0.5202		0.0005	0.0006	0.0008	0.0004	0.0007	0.0006	0.0009	0.0014	0.0018	0.0027	0.0034
	D8	0.2462	0.5199		0.0006	0.0007	0.0009	0.0007	0.0008	0.0006	0.0008	0.0010	0.0014	0.0022	0.0030
	D9	0.2462	0.5213		0.0005	0.0006	0.0008	0.0006	0.0006	0.0005	0.0006	0.0011	0.0014	0.0023	0.0030
	D10	0.2445	0.5220		0.0005	0.0006	0.0008	0.0005	0.0007	0.0004	0.0007	0.0012	0.0016	0.0022	0.0032
	D11	0.2458	0.5194		0.0005	0.0005	0.0006	0.0004	0.0006	0.0004	0.0005	0.0009	0.0012	0.0021	0.0028
	D12	0.2451	0.5202		0.0005	0.0007	0.0008	0.0005	0.0006	0.0006	0.0008	0.0012	0.0015	0.0024	0.0032
8F00000CBBC7031C	D1	0.2482	0.5220		0.0007	0.0008	0.0010	0.0007	0.0009	0.0006	0.0010	0.0015	0.0019	0.0024	0.0030
	D2	0.2449	0.5209		0.0007	0.0006	0.0010	0.0005	0.0007	0.0006	0.0007	0.0012	0.0015	0.0020	0.0025
	D3	0.2447	0.5214		0.0007	0.0008	0.0008	0.0009	0.0008	0.0007	0.0011	0.0016	0.0019	0.0024	0.0030
	D4	0.2461	0.5216		0.0006	0.0006	0.0008	0.0005	0.0007	0.0007	0.0013	0.0021	0.0024	0.0032	0.0039
	D5	0.2462	0.5219		0.0011	0.0012	0.0012	0.0011	0.0010	0.0009	0.0013	0.0017	0.0020	0.0023	0.0029
	D6	0.2462	0.5211		0.0009	0.0010	0.0010	0.0009	0.0009	0.0009	0.0012	0.0017	0.0021	0.0026	0.0034
	D7	0.2456	0.5215		0.0006	0.0008	0.0008	0.0007	0.0008	0.0009	0.0016	0.0024	0.0029	0.0039	0.0045
	D8	0.2450	0.5210		0.0008	0.0006	0.0007	0.0007	0.0008	0.0006	0.0009	0.0014	0.0019	0.0026	0.0031
	D9	0.2467	0.5214		0.0007	0.0005	0.0009	0.0005	0.0007	0.0004	0.0005	0.0015	0.0018	0.0024	0.0028
	D10	0.2454	0.5209		0.0008	0.0006	0.0008	0.0007	0.0007	0.0010	0.0018	0.0026	0.0030	0.0038	0.0047
	D11	0.2451	0.5227		0.0007	0.0006	0.0009	0.0006	0.0009	0.0008	0.0012	0.0019	0.0022	0.0030	0.0036
	D12	0.2453	0.5218		0.0007	0.0007	0.0009	0.0007	0.0009	0.0007	0.0012	0.0016	0.0020	0.0026	0.0032
				n	24	24	24	24	24	24	24	24	24	24	24
				mean	0.0006	0.0007	0.0009	0.0007	0.0008	0.0007	0.0010	0.0015	0.0019	0.0027	0.0033
				median	0.0007	0.0007	0.0008	0.0006	0.0007	0.0007	0.0010	0.0015	0.0019	0.0025	0.0032
				std. dev.	0.0001	0.0002	0.0001	0.0002	0.0001	0.0002	0.0003	0.0004	0.0004	0.0005	0.0005
				min	0.0004	0.0005	0.0006	0.0004	0.0006	0.0004	0.0005	0.0009	0.0012	0.0020	0.0025
				max	0.0011	0.0012	0.0012	0.0011	0.0010	0.0010	0.0018	0.0026	0.0030	0.0039	0.0047

This report may not be reproduced except
in full without permission of CSA Group.

CSA Group
14833 NE 87th St Redmond, WA 98052
425-605-8500
www.csagroup.org

Test Condition 2 85 °C 0.500 A

TABLE 3.2 - ANSI Target and Calculated CCT Results **GW CSHPM1.EM**

TEST CONDITION 1: 85 °C 0.500 A

Photometric test drive current: 0.500 A
Photometric test ambient temperature: 25 ± 2 °C
Failures observed: none

Load board ID	Device number	Zero hour measurements: ANSI Target* CCT (K)	Zero hour measurements: Calculated CCT (K)	Calculated CCT 24	48	168	500	1000	2000	3000	4000	5000	6000	7000
4800000CB96E031C	D1	3045±175	3133	3120	3119	3113	3119	3116	3114	3107	3101	3095	3096	3090
	D2	3045±175	3088	3072	3066	3067	3070	3069	3071	3069	3061	3052	3052	3054
	D3	3045±175	3154	3137	3136	3134	3137	3137	3139	3130	3127	3122	3122	3116
	D4	3045±175	3115	3104	3101	3098	3100	3098	3096	3094	3085	3077	3073	3071
	D5	3045±175	3075	3055	3052	3048	3052	3054	3051	3051	3051	3045	3041	3036
	D6	3045±175	3121	3104	3094	3095	3097	3098	3099	3097	3095	3090	3087	3084
	D7	3045±175	3127	3113	3110	3108	3116	3109	3116	3111	3104	3105	3101	3096
	D8	3045±175	3120	3107	3105	3102	3105	3103	3103	3103	3099	3093	3089	3087
	D9	3045±175	3111	3099	3097	3092	3099	3097	3099	3097	3094	3090	3090	3086
	D10	3045±175	3150	3140	3137	3135	3140	3135	3139	3134	3128	3121	3121	3114
	D11	3045±175	3134	3120	3121	3119	3125	3121	3124	3122	3124	3118	3118	3115
	D12	3045±175	3148	3135	3131	3129	3134	3134	3132	3130	3126	3123	3118	3113
8F00000CBBC7031C	D1	3045±175	3055	3038	3034	3032	3037	3033	3039	3035	3030	3028	3030	3024
	D2	3045±175	3147	3129	3130	3125	3133	3132	3132	3132	3124	3123	3127	3122
	D3	3045±175	3149	3131	3129	3129	3126	3129	3131	3125	3116	3116	3119	3114
	D4	3045±175	3111	3097	3095	3093	3099	3093	3097	3087	3083	3081	3080	3077
	D5	3045±175	3107	3078	3076	3075	3079	3081	3083	3078	3073	3071	3075	3069
	D6	3045±175	3112	3090	3086	3085	3090	3088	3091	3087	3082	3079	3081	3073
	D7	3045±175	3125	3109	3105	3103	3106	3105	3109	3096	3091	3089	3090	3088
	D8	3045±175	3144	3126	3127	3128	3126	3126	3128	3125	3118	3114	3118	3111
	D9	3045±175	3097	3079	3085	3079	3085	3085	3087	3087	3069	3067	3067	3066
	D10	3045±175	3134	3114	3119	3114	3116	3114	3111	3104	3095	3096	3096	3093
	D11	3045±175	3128	3111	3112	3106	3113	3107	3110	3107	3091	3092	3089	3087
	D12	3045±175	3129	3111	3112	3108	3110	3108	3111	3105	3097	3098	3096	3093
			n	24	24	24	24	24	24	24	24	24	24	24
			mean	3104.9	3103.3	3100.7	3104.7	3102.9	3104.7	3100.5	3094.4	3091.1	3090.7	3086.7
			median	3110.1	3107.2	3104.9	3107.9	3105.7	3109.2	3103.4	3095.2	3092.7	3090.2	3087.8
			std. dev.	26	27	27	26	26	26	25	25	26	26	25
			min	3038	3034	3032	3037	3033	3039	3035	3030	3028	3030	3024
			max	3140	3137	3135	3140	3137	3139	3134	3128	3123	3127	3122

* target CCT as defined in ANSI C78.377-2008

This report may not be reproduced except in full without permission of CSA Group.

CSA Group
14833 NE 87th St Redmond, WA 98052
425-605-8500
www.csagroup.org

Test Condition 2 85 °C 0.500 A

TABLE 3.3 - FORWARD VOLTAGE MAINTENANCE RESULTS **GW CSHPM1.EM**

TEST CONDITION 1: 85 °C 0.500 A

Photometric test drive current: 0.500 A
Photometric test ambient temperature: 25 ± 2 °C
Failures observed: none

Load board ID	Device number	Zero hour measurements Vf (V)	Forward Voltage Maintainence (%) 24	48	168	500	1000	2000	3000	4000	5000	6000	7000
4800000CB96E031C	D1	3.14	99.36	99.10	99.03	98.88	99.11	99.08	98.89	99.19	99.09	99.31	99.60
	D2	3.12	99.56	99.43	99.37	99.39	100.93	98.99	99.29	99.61	99.46	99.62	99.68
	D3	3.12	99.47	99.34	99.17	99.38	99.58	98.89	99.14	99.48	99.44	99.41	99.55
	D4	3.13	99.81	99.72	99.48	99.64	99.38	100.40	99.50	99.75	99.62	99.67	99.86
	D5	3.09	99.79	99.73	99.75	99.68	99.23	100.21	99.77	99.90	99.76	100.70	100.11
	D6	3.02	99.78	99.89	99.96	99.94	100.04	100.08	99.98	100.05	99.96	100.93	100.12
	D7	3.08	99.63	99.78	99.73	99.73	100.42	101.55	100.12	100.00	100.07	101.36	100.08
	D8	3.13	98.98	99.03	98.93	98.99	97.90	97.95	99.34	99.53	99.52	100.84	99.53
	D9	3.09	99.44	99.37	99.96	99.34	98.60	98.92	100.34	100.65	99.68	99.66	100.01
	D10	3.13	99.47	99.53	99.99	99.43	100.43	99.43	100.56	101.26	99.68	99.64	100.11
	D11	3.05	100.56	100.32	100.20	100.23	101.52	100.12	100.20	100.40	100.35	100.28	101.77
	D12	3.13	99.63	99.32	99.29	99.14	95.82	99.64	99.27	99.45	99.37	99.34	100.94
8F00000CBBC7031C	D1	3.14	99.39	99.31	99.20	99.05	104.92	99.31	99.23	99.57	99.23	99.47	99.47
	D2	3.11	99.65	99.64	99.57	99.52	101.17	100.32	99.38	99.78	99.48	99.72	99.69
	D3	3.10	99.66	99.51	99.43	99.41	98.68	99.28	99.50	99.84	99.57	99.69	99.73
	D4	3.09	100.19	100.14	100.02	99.96	101.43	101.59	99.92	100.15	100.02	100.04	100.09
	D5	3.10	99.89	99.78	99.76	99.89	100.23	100.08	99.66	99.91	99.79	100.05	100.04
	D6	3.12	99.34	98.99	98.86	99.07	97.70	97.91	99.15	99.28	99.18	99.43	99.41
	D7	3.13	100.58	99.50	99.59	99.60	98.17	99.24	99.66	100.00	99.74	102.44	100.37
	D8	3.09	100.75	99.70	99.73	99.71	98.19	97.92	99.81	100.09	99.92	101.08	100.57
	D9	3.03	99.86	99.67	99.73	99.64	99.91	100.15	99.81	100.10	99.87	100.16	100.09
	D10	3.14	99.59	99.39	99.34	99.25	99.06	100.07	99.37	99.69	99.56	99.76	99.69
	D11	3.13	99.91	99.60	99.57	99.57	99.72	98.29	99.68	99.97	99.65	99.84	99.90
	D12	3.14	99.45	99.29	99.13	99.17	96.72	98.97	99.10	99.37	99.24	99.24	99.67
		n	24	24	24	24	24	24	24	24	24	24	24
		mean	99.7	99.5	99.5	99.5	99.5	99.5	99.6	99.9	99.6	100.1	100.0
		median	99.6	99.5	99.6	99.5	99.5	99.4	99.6	99.9	99.6	99.7	100.0
		std. dev.	0.4	0.3	0.4	0.3	1.8	1.0	0.4	0.5	0.3	0.8	0.5
		min	99.0	99.0	98.9	98.9	95.8	97.9	98.9	99.2	99.1	99.2	99.4
		max	100.7	100.3	100.2	100.2	104.9	101.6	100.6	101.3	100.4	102.4	101.8

This report may not be reproduced except in full without permission of CSA Group.

CSA Group
14833 NE 87th St Redmond, WA 98052
425-605-8500
www.csagroup.org

Test Condition 3 105 °C 0.500 A

TABLE 4.0 - LUMEN MAINTENANCE RESULTS **GW CSHPM1.EM**

TEST CONDITION 1: 105 °C 0.500 A

Photometric test drive current: 0.500 A
Photometric test ambient temperature: 25 ± 2 °C
Failures observed: none

Load board ID	Device number	Zero hour measurements Flux (lm)	Zero hour measurements Vf (V)	Lumen Maintenance (%) 24	48	168	500	1000	2000	3000	4000	5000	6000	7000
4C00000CBBA2031C	D1	126.89	3.03	99.0	99.5	98.9	98.4	98.1	97.5	96.1	95.2	94.4	93.6	92.4
	D2	129.60	3.12	98.4	98.9	98.2	97.3	96.6	95.5	93.8	92.9	91.7	90.9	89.5
	D3	128.19	3.02	99.0	99.5	98.8	98.3	97.9	97.1	95.7	94.7	93.8	93.1	91.7
	D4	127.95	3.13	97.7	98.3	97.5	96.6	95.8	94.7	92.7	91.7	90.5	89.7	88.4
	D5	129.33	3.08	98.9	99.4	98.9	98.2	97.8	97.2	95.6	95.1	94.3	93.7	92.6
	D6	128.92	3.02	98.7	98.8	98.1	97.5	97.1	96.2	94.8	94.4	93.5	92.9	91.7
	D7	127.18	3.09	99.2	99.8	99.3	98.8	98.3	97.7	96.2	95.5	94.8	94.4	93.3
	D8	129.64	3.11	98.5	99.2	98.4	97.8	97.3	96.5	95.0	94.4	93.4	92.8	91.6
	D9	128.60	3.03	99.2	99.7	99.1	98.5	98.2	97.7	96.2	95.7	94.9	94.2	93.0
	D10	127.99	3.12	98.7	99.3	98.6	97.9	97.1	96.1	94.3	93.2	92.2	91.5	90.3
	D11	130.39	3.00	99.0	99.5	98.9	98.2	97.8	97.1	95.5	94.4	93.3	92.6	91.4
	D12	128.03	3.04	99.2	99.7	99.0	98.4	97.8	97.0	94.9	94.0	92.8	92.0	90.7
C100000CB30C031C	D1	128.67	3.14	98.6	98.4	98.1	97.2	96.4	95.1	94.6	92.9	91.7	90.6	90.1
	D2	129.00	3.04	98.8	98.9	98.5	97.8	97.2	96.1	95.9	94.6	93.6	92.7	92.1
	D3	129.95	3.07	98.7	98.6	98.5	97.9	97.5	96.5	96.5	95.0	94.5	93.8	93.6
	D4	126.25	3.03	99.3	99.4	99.3	98.7	98.1	97.1	97.0	95.5	94.6	93.9	93.7
	D5	129.10	3.13	98.6	98.5	98.2	97.0	96.0	94.5	94.0	92.3	91.1	89.9	89.3
	D6	128.29	3.08	98.8	98.7	98.4	97.5	96.8	95.4	94.8	92.8	92.3	91.3	90.8
	D7	127.08	3.12	98.8	97.8	98.0	97.7	96.9	95.6	94.9	93.1	91.8	90.9	90.6
	D8	129.14	3.08	98.7	98.7	98.6	98.1	97.7	97.0	97.0	95.8	95.1	94.4	94.3
	D9	129.03	3.04	98.9	99.0	98.7	98.1	97.7	96.8	96.8	95.5	94.7	93.8	93.6
	D10	129.04	3.08	99.0	99.1	99.0	98.5	98.0	97.2	97.0	95.2	94.5	93.7	93.5
	D11	129.02	3.09	98.8	98.9	98.6	97.7	96.9	95.8	95.3	93.5	92.1	91.1	90.7
	D12	129.70	3.12	98.8	98.9	98.5	97.5	96.8	95.5	94.8	93.0	91.7	90.6	90.1
			n	24	24	24	24	24	24	24	24	24	24	24
			mean	98.8	99.0	98.6	97.9	97.3	96.4	95.4	94.2	93.2	92.4	91.6
			median	98.8	98.9	98.6	97.9	97.4	96.5	95.4	94.4	93.5	92.7	91.6
			std. dev.	0.3	0.5	0.4	0.5	0.7	0.9	1.1	1.2	1.4	1.5	1.6
			min	97.7	97.8	97.5	96.6	95.8	94.5	92.7	91.7	90.5	89.7	88.4
			max	99.3	99.8	99.3	98.8	98.3	97.7	97.0	95.8	95.1	94.4	94.3

This report may not be reproduced except in full without permission of CSA Group.

CSA Group
14833 NE 87th St Redmond, WA 98052
425-605-8500
www.csagroup.org

Test Condition 3 105 °C 0.500 A

TABLE 4.1 - CHROMATICITY SHIFT RESULTS **GW CSHPM1.EM**

TEST CONDITION 1: 105 °C 0.500 A

Photometric test drive current: 0.500 A
Photometric test ambient temperature: 25 ± 2 °C
Failures observed: none

Load board ID	Device number	Zero hour measurements u'	Zero hour measurements v'		Chromaticity shift (Δu'v') 24	48	168	500	1000	2000	3000	4000	5000	6000	7000
4C00000CBBA2031C	D1	0.2478	0.5213		0.0003	0.0004	0.0005	0.0002	0.0002	0.0005	0.0010	0.0016	0.0022	0.0027	0.0035
	D2	0.2447	0.5212		0.0005	0.0006	0.0006	0.0003	0.0004	0.0005	0.0011	0.0018	0.0024	0.0030	0.0038
	D3	0.2467	0.5201		0.0004	0.0006	0.0006	0.0002	0.0002	0.0003	0.0009	0.0018	0.0024	0.0031	0.0039
	D4	0.2462	0.5216		0.0007	0.0007	0.0007	0.0004	0.0007	0.0007	0.0012	0.0022	0.0028	0.0034	0.0042
	D5	0.2472	0.5214		0.0005	0.0007	0.0005	0.0002	0.0003	0.0004	0.0009	0.0017	0.0022	0.0031	0.0039
	D6	0.2448	0.5217		0.0006	0.0009	0.0008	0.0006	0.0006	0.0010	0.0014	0.0023	0.0028	0.0035	0.0044
	D7	0.2480	0.5238		0.0003	0.0005	0.0002	0.0002	0.0001	0.0005	0.0012	0.0019	0.0024	0.0032	0.0038
	D8	0.2455	0.5199		0.0006	0.0005	0.0004	0.0002	0.0003	0.0005	0.0011	0.0018	0.0025	0.0032	0.0040
	D9	0.2464	0.5224		0.0004	0.0004	0.0004	0.0001	0.0002	0.0007	0.0011	0.0019	0.0025	0.0031	0.0039
	D10	0.2461	0.5215		0.0004	0.0005	0.0003	0.0001	0.0001	0.0005	0.0013	0.0021	0.0028	0.0034	0.0043
	D11	0.2457	0.5231		0.0004	0.0005	0.0005	0.0001	0.0002	0.0006	0.0012	0.0019	0.0024	0.0031	0.0038
	D12	0.2453	0.5204		0.0005	0.0005	0.0005	0.0003	0.0004	0.0005	0.0013	0.0021	0.0026	0.0032	0.0042
C100000CB30C031C	D1	0.2457	0.5216		0.0005	0.0006	0.0007	0.0003	0.0002	0.0004	0.0009	0.0016	0.0022	0.0028	0.0035
	D2	0.2448	0.5214		0.0008	0.0007	0.0010	0.0006	0.0004	0.0006	0.0010	0.0016	0.0020	0.0025	0.0033
	D3	0.2460	0.5216		0.0009	0.0009	0.0009	0.0006	0.0005	0.0008	0.0011	0.0016	0.0021	0.0028	0.0036
	D4	0.2471	0.5223		0.0005	0.0006	0.0006	0.0002	0.0002	0.0004	0.0007	0.0014	0.0019	0.0025	0.0032
	D5	0.2464	0.5223		0.0005	0.0006	0.0005	0.0003	0.0003	0.0005	0.0006	0.0013	0.0017	0.0024	0.0032
	D6	0.2450	0.5205		0.0007	0.0008	0.0008	0.0005	0.0005	0.0006	0.0011	0.0018	0.0023	0.0030	0.0037
	D7	0.2468	0.5222		0.0004	0.0005	0.0004	0.0002	0.0001	0.0005	0.0009	0.0015	0.0021	0.0026	0.0035
	D8	0.2472	0.5208		0.0007	0.0008	0.0008	0.0005	0.0003	0.0004	0.0006	0.0011	0.0016	0.0023	0.0030
	D9	0.2447	0.5211		0.0008	0.0007	0.0008	0.0005	0.0003	0.0006	0.0010	0.0017	0.0023	0.0029	0.0037
	D10	0.2471	0.5205		0.0003	0.0005	0.0005	0.0003	0.0001	0.0009	0.0012	0.0019	0.0026	0.0030	0.0039
	D11	0.2474	0.5222		0.0006	0.0005	0.0006	0.0004	0.0002	0.0004	0.0008	0.0014	0.0020	0.0025	0.0033
	D12	0.2455	0.5200		0.0005	0.0005	0.0006	0.0002	0.0002	0.0007	0.0012	0.0019	0.0026	0.0033	0.0043
				n	24	24	24	24	24	24	24	24	24	24	24
				mean	0.0005	0.0006	0.0006	0.0003	0.0003	0.0006	0.0010	0.0018	0.0023	0.0029	0.0037
				median	0.0005	0.0006	0.0006	0.0003	0.0003	0.0005	0.0011	0.0018	0.0023	0.0030	0.0038
				std. dev.	0.0002	0.0001	0.0002	0.0002	0.0002	0.0002	0.0002	0.0003	0.0003	0.0003	0.0004
				min	0.0003	0.0004	0.0002	0.0001	0.0001	0.0003	0.0006	0.0011	0.0016	0.0023	0.0030
				max	0.0009	0.0009	0.0010	0.0006	0.0007	0.0010	0.0014	0.0023	0.0028	0.0035	0.0044

This report may not be reproduced except
in full without permission of CSA Group.

CSA Group
14833 NE 87th St Redmond, WA 98052
425-605-8500
www.csagroup.org

Test Condition 3 105 °C 0.500 A

TABLE 4.2 - ANSI Target and Calculated CCT Results **GW CSHPM1.EM**
TEST CONDITION 1: 105 °C 0.500 A

Photometric test drive current: 0.500 A
Photometric test ambient temperature: 25 ± 2 °C
Failures observed: none

Load board ID	Device number	Zero hour measurements: ANSI Target* CCT (K)	Zero hour measurements: Calculated CCT (K)	Calculated CCT 24	48	168	500	1000	2000	3000	4000	5000	6000	7000
4C00000CBBA2031C	D1	3045±175	3071	3064	3062	3061	3069	3067	3071	3066	3063	3054	3058	3055
	D2	3045±175	3150	3136	3134	3134	3142	3141	3141	3138	3130	3123	3132	3125
	D3	3045±175	3108	3096	3093	3094	3103	3101	3105	3101	3093	3085	3090	3090
	D4	3045±175	3109	3090	3090	3092	3099	3092	3099	3092	3086	3081	3083	3083
	D5	3045±175	3084	3070	3068	3073	3080	3077	3078	3076	3072	3065	3070	3066
	D6	3045±175	3144	3127	3118	3123	3129	3129	3127	3128	3123	3117	3125	3120
	D7	3045±175	3047	3040	3040	3043	3049	3046	3049	3041	3036	3030	3042	3035
	D8	3045±175	3139	3122	3126	3129	3132	3132	3137	3131	3127	3119	3126	3119
	D9	3045±175	3098	3088	3089	3089	3098	3094	3099	3097	3093	3086	3090	3085
	D10	3045±175	3113	3103	3103	3107	3110	3111	3113	3104	3097	3092	3096	3094
	D11	3045±175	3111	3100	3101	3101	3110	3106	3111	3103	3098	3096	3102	3095
	D12	3045±175	3141	3129	3128	3130	3137	3133	3139	3126	3122	3115	3120	3118
C100000CB30C031C	D1	3045±175	3120	3108	3108	3104	3112	3115	3117	3115	3109	3099	3103	3096
	D2	3045±175	3147	3126	3127	3121	3130	3135	3138	3132	3130	3123	3123	3120
	D3	3045±175	3115	3092	3091	3090	3101	3103	3102	3101	3102	3097	3098	3095
	D4	3045±175	3080	3067	3068	3070	3076	3078	3077	3076	3072	3064	3070	3064
	D5	3045±175	3098	3085	3085	3087	3092	3093	3092	3093	3091	3079	3081	3077
	D6	3045±175	3149	3130	3128	3127	3135	3137	3141	3132	3123	3121	3121	3117
	D7	3045±175	3089	3080	3078	3081	3085	3091	3090	3083	3079	3071	3076	3071
	D8	3045±175	3089	3070	3070	3070	3078	3082	3085	3086	3085	3079	3083	3076
	D9	3045±175	3152	3130	3133	3131	3139	3143	3146	3144	3140	3137	3137	3134
	D10	3045±175	3094	3086	3083	3083	3089	3093	3096	3091	3085	3080	3083	3079
	D11	3045±175	3072	3058	3059	3058	3062	3069	3072	3068	3064	3053	3058	3055
	D12	3045±175	3139	3125	3127	3124	3133	3134	3139	3129	3133	3123	3131	3125
			n	24	24	24	24	24	24	24	24	24	24	24
			mean	3096.8	3096.2	3096.7	3103.7	3104.2	3106.8	3102.2	3098.1	3091.2	3095.8	3091.5
			median	3094.2	3091.8	3092.9	3101.8	3102.0	3103.6	3100.9	3094.9	3088.9	3093.5	3091.6
			std. dev.	27	27	27	27	27	27	27	27	27	26	27
			min	3040	3040	3043	3049	3046	3049	3041	3036	3030	3042	3035
			max	3136	3134	3134	3142	3143	3146	3144	3140	3137	3137	3134

* target CCT as defined in ANSI C78.377-2008

This report may not be reproduced except in full without permission of CSA Group.

CSA Group
14833 NE 87th St Redmond, WA 98052
425-605-8500
www.csagroup.org

Test Condition 3 105 °C 0.500 A

TABLE 4.3 - FORWARD VOLTAGE MAINTENANCE RESULTS **GW CSHPM1.EM**

TEST CONDITION 1: 105 °C 0.500 A

Photometric test drive current: 0.500 A
Photometric test ambient temperature: 25 ± 2 °C
Failures observed: none

Load board ID	Device number	Zero hour measurements Vf (V)	Forward Voltage Maintainence (%) 24	48	168	500	1000	2000	3000	4000	5000	6000	7000
4C00000CBBA2031C	D1	3.03	100.29	100.14	100.19	100.13	101.80	102.10	100.14	100.84	101.21	100.31	100.72
	D2	3.12	99.66	99.55	99.53	99.37	101.11	106.43	99.81	100.41	100.57	100.15	100.50
	D3	3.02	100.21	100.17	100.19	100.24	101.64	100.24	100.14	100.74	100.95	100.29	100.55
	D4	3.13	99.95	99.88	99.81	99.66	100.73	100.80	99.99	100.70	100.89	100.31	100.59
	D5	3.08	100.05	99.93	99.98	100.05	99.73	100.52	99.99	100.70	100.91	100.69	100.77
	D6	3.02	99.98	99.89	99.88	100.39	101.35	100.43	100.15	100.84	101.15	100.73	100.80
	D7	3.09	100.08	99.88	100.07	100.12	99.19	100.36	100.07	102.50	101.09	100.45	103.92
	D8	3.11	99.39	99.32	99.48	99.46	98.31	98.47	99.62	100.42	100.77	100.03	100.39
	D9	3.03	99.72	99.63	99.77	99.76	99.67	100.05	99.69	100.17	100.75	100.01	101.54
	D10	3.12	99.60	99.55	99.58	99.59	100.66	100.84	99.83	100.28	100.90	100.11	101.72
	D11	3.00	100.83	100.70	100.71	100.71	102.52	101.26	100.45	100.99	102.92	100.68	101.22
	D12	3.04	100.21	100.16	100.09	100.17	99.18	100.77	99.93	100.46	102.70	100.12	100.42
C100000CB30C031C	D1	3.14	99.63	99.42	99.38	99.23	98.39	99.54	99.81	100.20	100.38	100.36	100.35
	D2	3.04	100.34	100.19	100.21	100.23	102.57	100.98	100.23	100.56	100.46	100.27	100.70
	D3	3.07	100.11	100.11	99.97	100.05	100.62	100.50	100.26	100.74	100.84	100.88	100.83
	D4	3.03	100.55	100.59	100.61	100.62	102.95	103.15	100.50	100.90	101.18	101.23	100.96
	D5	3.13	99.44	99.39	99.51	99.39	98.50	99.37	99.72	100.33	100.79	100.26	100.97
	D6	3.08	99.73	99.83	99.89	99.89	98.13	99.31	100.15	102.37	101.04	100.64	101.32
	D7	3.12	99.70	99.67	99.72	99.57	99.50	99.70	100.00	100.42	100.59	101.00	100.58
	D8	3.08	99.50	99.47	99.66	99.58	97.99	97.85	100.09	100.47	100.60	100.92	100.62
	D9	3.04	99.73	99.59	99.72	99.79	99.62	99.98	99.94	100.23	100.32	99.92	100.14
	D10	3.08	99.85	99.83	99.90	99.89	100.13	101.48	100.30	100.83	100.89	100.40	100.70
	D11	3.09	100.34	100.11	100.11	100.06	100.72	99.09	100.24	100.97	100.93	100.52	100.87
	D12	3.12	99.67	99.43	99.34	99.34	97.02	99.80	99.89	100.30	100.60	100.11	100.22
		n	24	24	24	24	24	24	24	24	24	24	24
		mean	99.9	99.9	99.9	99.9	100.1	100.5	100.0	100.7	101.0	100.4	100.9
		median	99.9	99.9	99.9	99.9	99.9	100.4	100.0	100.6	100.9	100.3	100.7
		std. dev.	0.4	0.4	0.4	0.4	1.6	1.7	0.2	0.6	0.6	0.3	0.8
		min	99.4	99.3	99.3	99.2	97.0	97.8	99.6	100.2	100.3	99.9	100.1
		max	100.8	100.7	100.7	100.7	103.0	106.4	100.5	102.5	102.9	101.2	103.9

This report may not be reproduced except
in full without permission of CSA Group.

CSA Group
14833 NE 87th St Redmond, WA 98052
425-605-8500
www.csagroup.org

5.0 Charts:

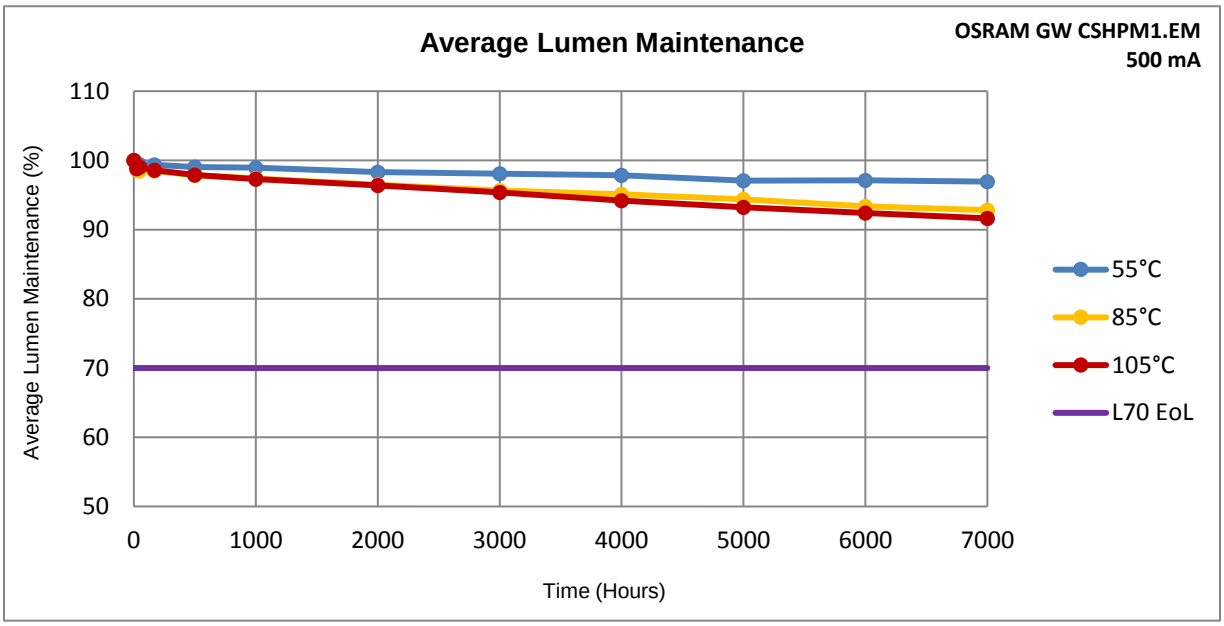

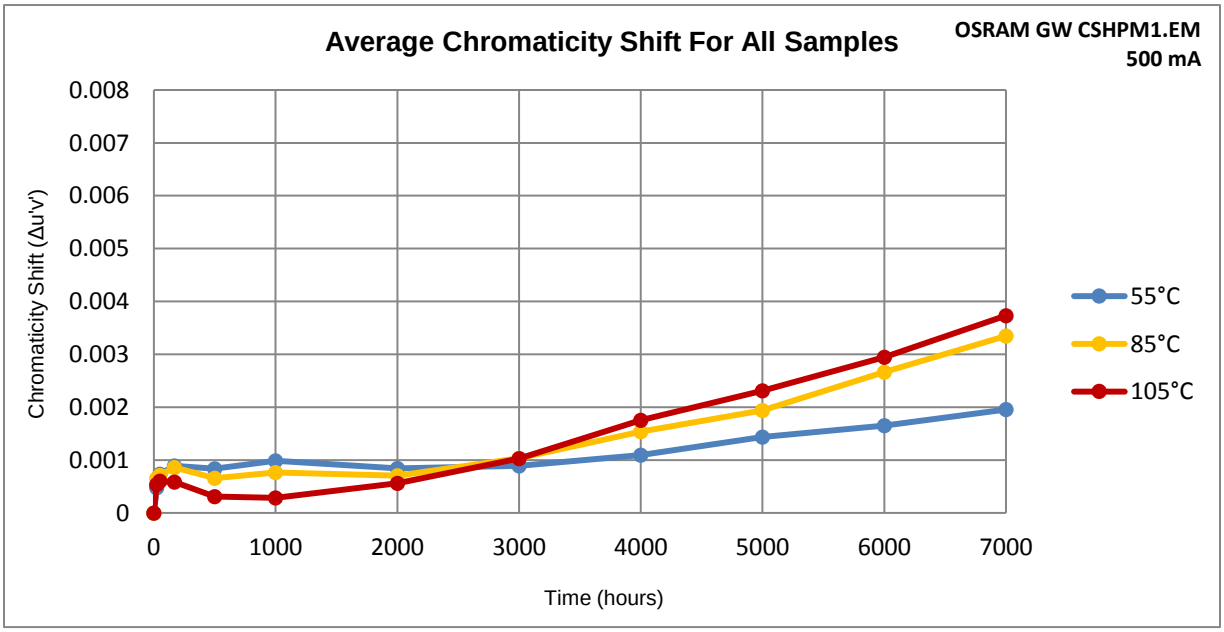

This report may not be reproduced except
in full without permission of CSA Group.

CSA Group
14833 NE 87th St Redmond, WA 98052
425-605-8500
www.csagroup.org

6.0 Additional Information

6.1 Auxilliary Equipment

Lifetest thermal chamber:	Orb Optronix Thermal Platform - resistive heating, liquid cooling, no forced air flow
Lifetest current source:	Orb Optronix LM80-12D-150-01
Photometric test current source:	Keithley 2425
Photometric test thermal control:	Orb Optronix TEC-100
Spectrometer:	Orb Optronix SP-75
Integrating Sphere:	SphereOptics 20''
Photometric reference standards:	LabSphere SCL-50

6.2 Additional Test Information

.1. Photometric measurements are taken in the first 19 msec of a 25 msec current pulse.

6.3 Photographs

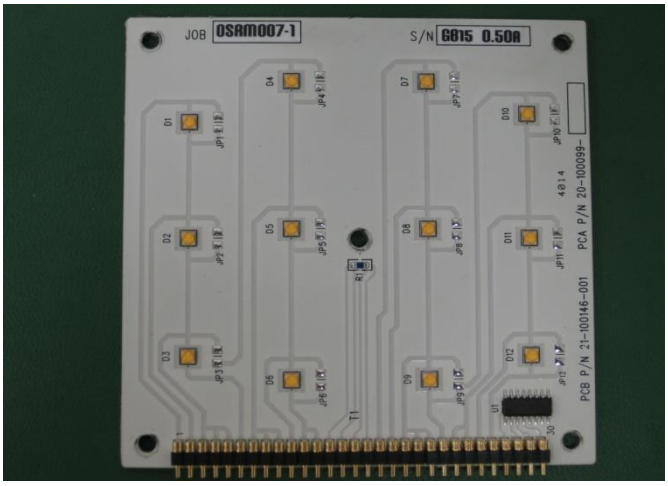

Fig. 1 Load board with 12 samples. Absorption correction measurements are made for each load board measurement.

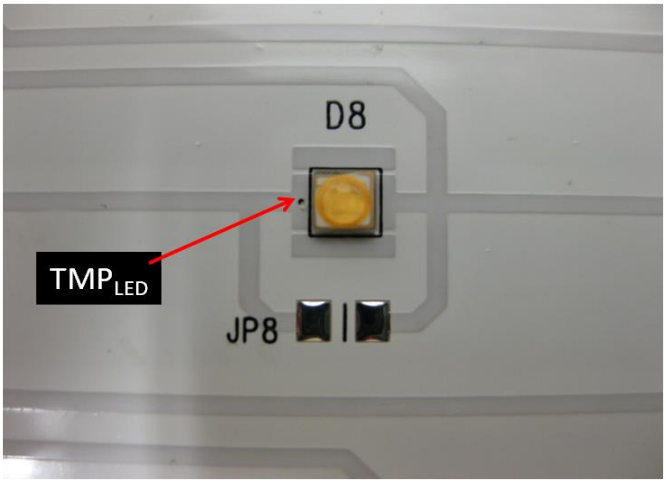

Fig. 2 OSRAM OSLON 80 LED and temperature measurement point - device cathode.

This report may not be reproduced except in full without permission of CSA Group.

CSA Group
14833 NE 87th St Redmond, WA 98052
425-605-8500
www.csagroup.org

6.4 Dimensional Drawing*

* all dimension in millimeters

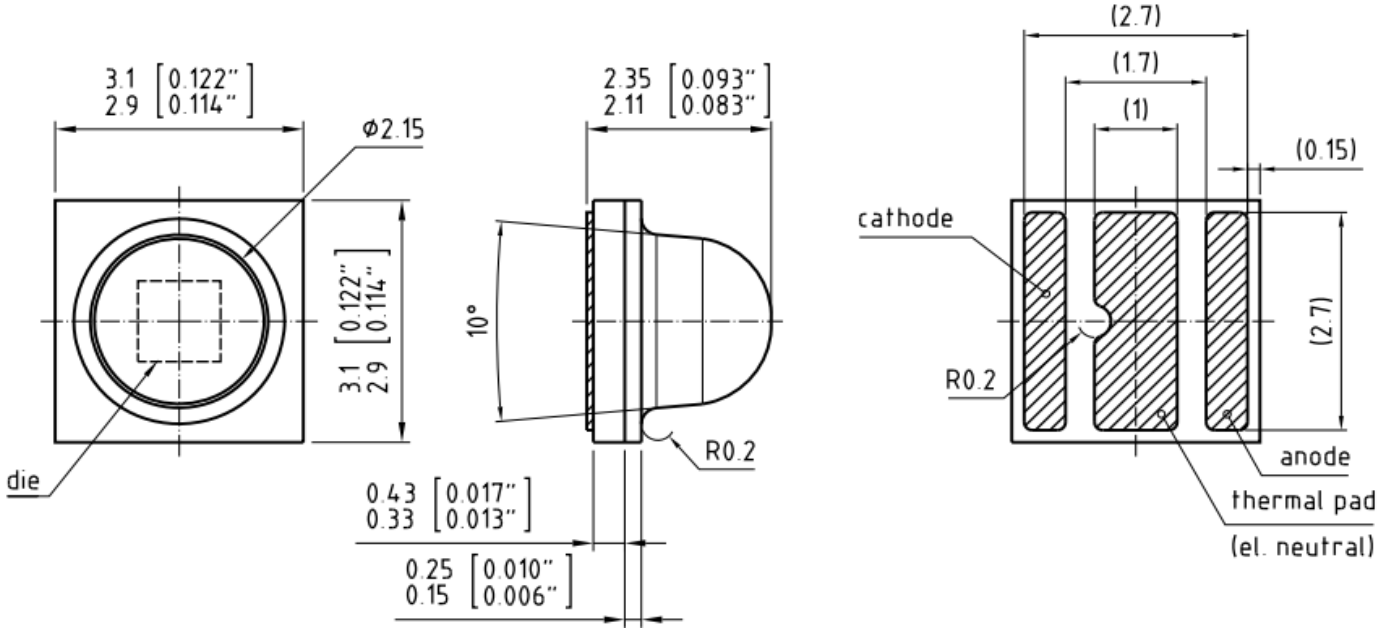

- END OF REPORT -

This report may not be reproduced except
in full without permission of CSA Group.

CSA Group
14833 NE 87th St Redmond, WA 98052
425-605-8500
www.csagroup.org

Appendix A:
Lumen Maintenance Projection (IES TM-21-11)

For Information Only!

1. General Information

Description of LED light source tested	OSLON SSL GW CSHPM1.EM
Sample size per temperature	24
LED drive current used in the test	500 mA
Test duration	7,000 hours
Test duration used for projection	2,000 hours to 7,000 hours

2. Projection Data

	I	II	III
Case temperature (solder point)	T_S = 55 °C	T_S = 85 °C	T_S = 105 °C
α	3.061E-06	7.847E-06	1.021E-05
B	9.892E-01	9.803E-01	9.826E-01
Reported L70	> 42,000 hours	> 42,000 hours	33,229 hours

3. Graphic chart

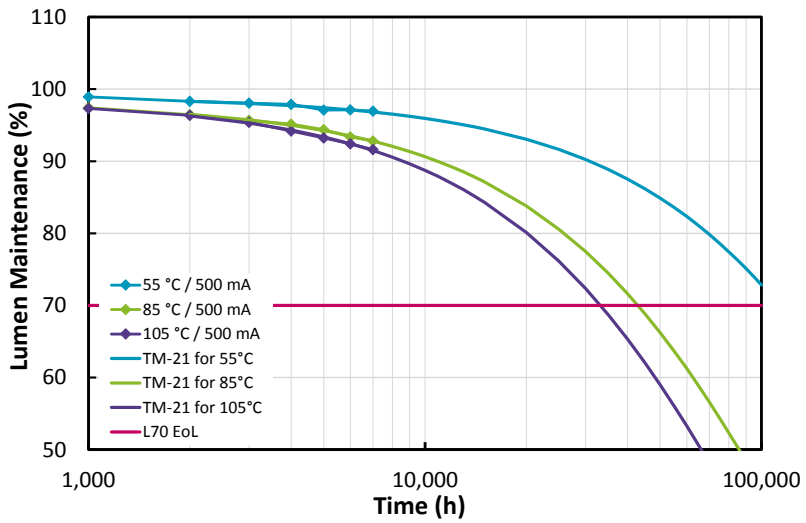

Distribution of part or all of the contents of this Document to any 3rd party in any form without the prior permission of OSRAM Opto Semiconductors GmbH is prohibited except in accordance with applicable mandatory law.

OSRAM
Opto Semiconductors

Appendix B:
Additional Models Covered By Testing

The 9 September 2011 ENERGY STAR® *Program Guidance Regarding LED Package, LED Array and LED Module Lumen Maintenance Performance Data Supporting Qualification of Lighting Products* defines conditons for which a LM-80 report may be applied to cover models that have not been directly tested.

The following list of models may be covered by the test results in this report:

- OSLON SSL GW CSHPM1.CM with CCT 2700 K – 4000 K
- OSLON SSL GW CSHPM1.EM with CCT 2500 K – 5000 K
- OSLON SSL GW CSHPM1.PM with CCT 3000 K – 6500 K
- OSLON SSL GW CS8PM1.CM with CCT 2700 K – 4000 K
- OSLON SSL GW CS8PM1.EM with CCT 2500 K – 5000 K
- OSLON SSL GW CS8PM1.PM with CCT 3000 K – 6500 K

Distribution of part or all of the contents of this Document to any 3rd party in any form without the prior permission of OSRAM Opto Semiconductors GmbH is prohibited except in accordance with applicable mandatory law.

END OF DOCUMENT

OSRAM Opto Semiconductors
GmbH

Head Office:

Leibnizstrasse 4
93055 Regensburg, Germany
Phone +49 941 850-5
Fax +49 941 850-1002
www.osram-os.com